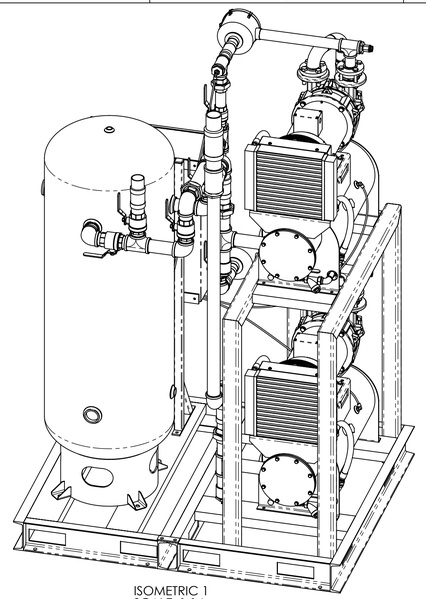

ISOMETRIC 1
SCALE: 1:14

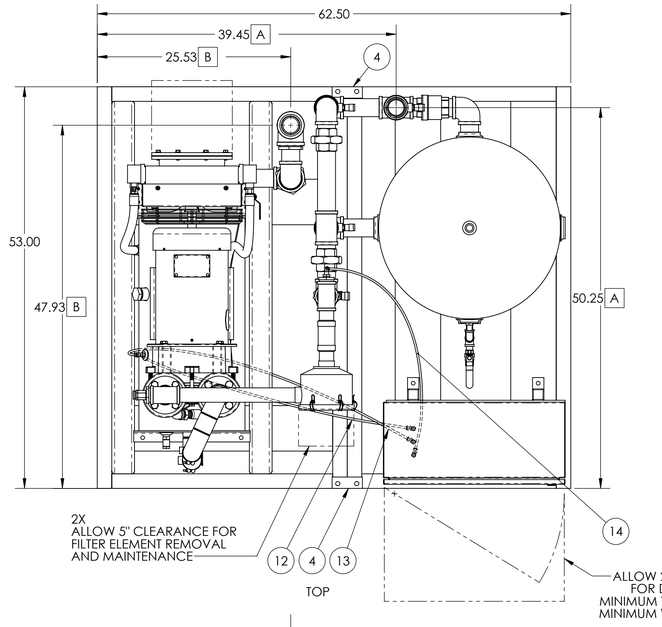

TOP

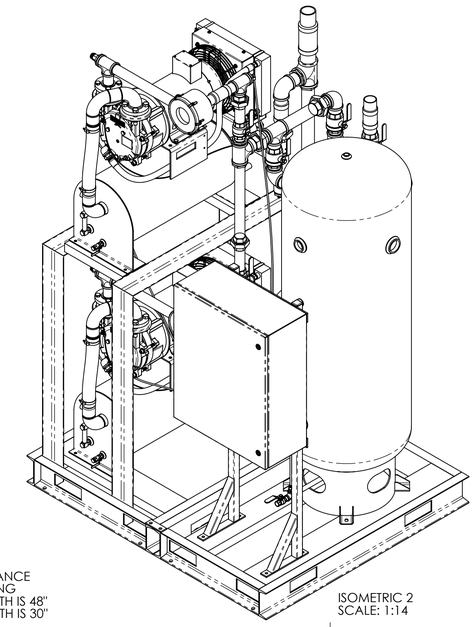

ISOMETRIC 2
SCALE: 1:14

086902				
ITEM NO.	QTY	LENGTH	DESCRIPTION	PART NUMBER
1	1		BASEPLATE - PUMP - 086902	0300-2019-649
2	1		BASEPLATE - TANK - 086902	0300-2019-659
3	1		CTRL PNL VMAX MEDICAL DUP 7.5HP 460V N12	2202-0801-540
4	2		BRACKET BASEPLATE TAB 4" X 1.5" LG	2728-2007-680
5	1		BRACKET CNTL PNL 24X30X8	2730-2013-347
6	6		FTNG 90° .25"MNPTX.25"TUBE BRS PUSH	3039-0025-001
7	2		PLUG PROTECTIVE 1.5" SQR POLY	3842-0150-000
8	1		RECEIVER TANK VERT 120 GAL ASME MOD	6004-0120-009
9	2		SUB ASSEMBLY PIPING VMX0103M AIR	6870-0103-011
10	1		SYSTEM PIPING CS	6890-086902-1
11	2		SWITCH LEVEL 1"MNPT N7 BRS/SST/GOLD	6910-0100-007
12	1	39.6	TUBING .25"OD FEP/TEFLN TRANSLUCENT	7200-0025-001
13	1	58.78	TUBING .25"OD FEP/TEFLN TRANSLUCENT	7200-0025-001
14	1	74.1	TUBING .25"OD FEP/TEFLN TRANSLUCENT	7200-0025-001
15	2		VMAX 100 CFM SYSTEM 7.5 HP MTR MNT	VMX0103MA1-11

NOTES:
1) LOCATE VACUUM PUMP ON FLAT LEVEL SURFACE.
2) PLUG ALL UNUSED PORTS WITH NPT PLUG.
3) OIL CAPACITY: 6 GALLONS FOR EACH PUMP. P/N: 5220-3300-000
4) REFERENCE WI-EN-039 FOR ALL HARDWARE TORQUE SPECIFICATIONS.

PRELIMINARY ONLY
NOT FOR CONSTRUCTION

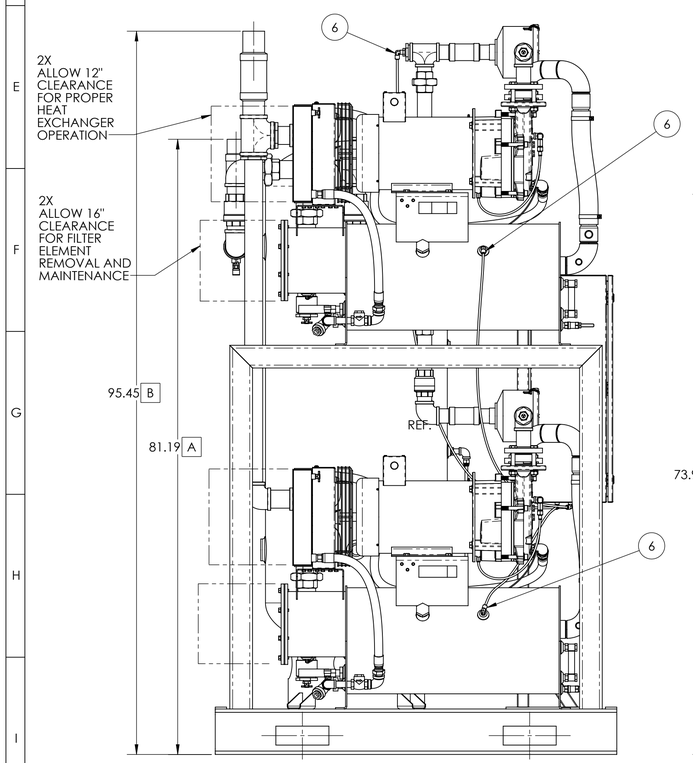

LEFT

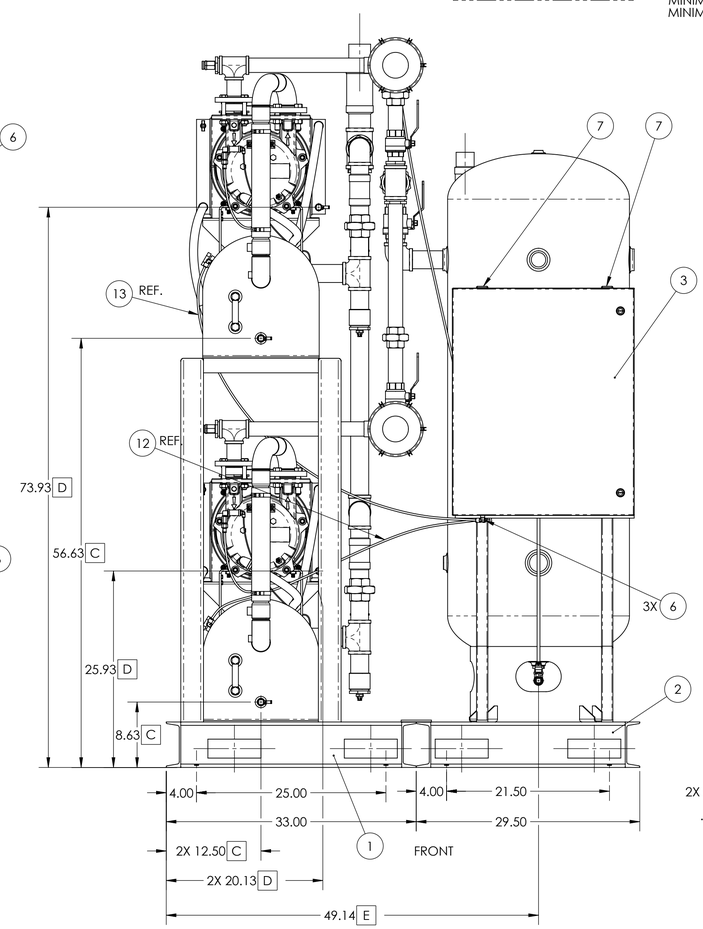

FRONT

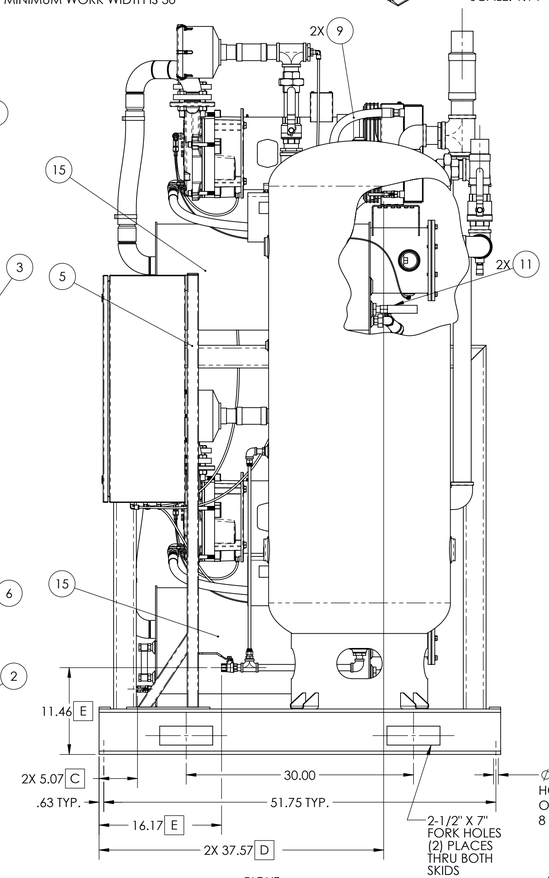

RIGHT

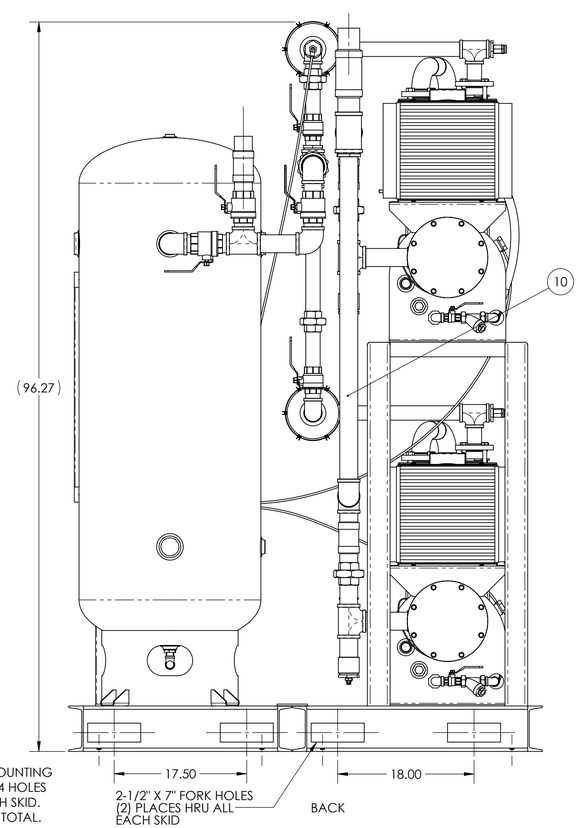

BACK

SYSTEM NOZZLE SCHEDULE		
IDENTIFIER	CONNECTION	SIZE
A	VAPOR INLET	2" MNPT
B	VAPOR DISCHARGE	2-1/2" MNPT
C	SEPARATOR DRAIN	3/8" FNPT
D	HEAT EXCHANGER DRAIN	3/8" FNPT
E	RECEIVER TANK DRAIN	1/2" FNPT

THIS DRAWING HAS NOT YET BEEN APPROVED

REVISIONS					
REV.	DESCRIPTION	DATE	DWG	ERP	APP

TOLERANCES
DIMENSIONS ARE IN INCHES UNLESS OTHERWISE SPECIFIED IN DRAWING
DECIMAL ± .50"
FRACTIONAL ± 1/2"
ANGULAR ± .5°

THIRD ANGLE PROJECTION

THIS PRINT IS PROPERTY OF DEKKER VACUUM TECHNOLOGIES, INC. AND MAY NOT BE GIVEN TO ANY OTHER CONCERN WITHOUT THE CONSENT OF DEKKER VACUUM TECHNOLOGIES, INC.

MODEL NO. VMX0103MA2-40-DS
PART NO. 086902
DESIGN BY: DATE:
DRAWING BY: DATE:
CHECKED BY: DATE:
APPROVED BY: DATE:
REVIEWED BY: DATE:

DEKKER VACUUM TECHNOLOGIES, INC.

DESCRIPTION VMX0103MA2-40-DS TEFC 460V

DRAWING TYPE PRODUCTION
DWG NO. 2019646
SHEET D
WEIGHT: 1634.94 LB
SCALE: 1:10
SHEET NO. 1 OF 1
SIZE