REV	REVISION	DATE	ECN	NAME	CHKD
B-1	RELEASE TO PRODUCTION	09/04/12	22722	CHR	DMS
D-2	UPDATED DATA TABLE VALUES	9/10/13	PXEC_30	AJL	KMD
D-3	UPDATED DATA TABLE VALUES	11/19/13	PXEC_30	KMD	KMD
E-1	UPDATED BACNET CARD	07/20/15	PXEC0110	MJD	KMD

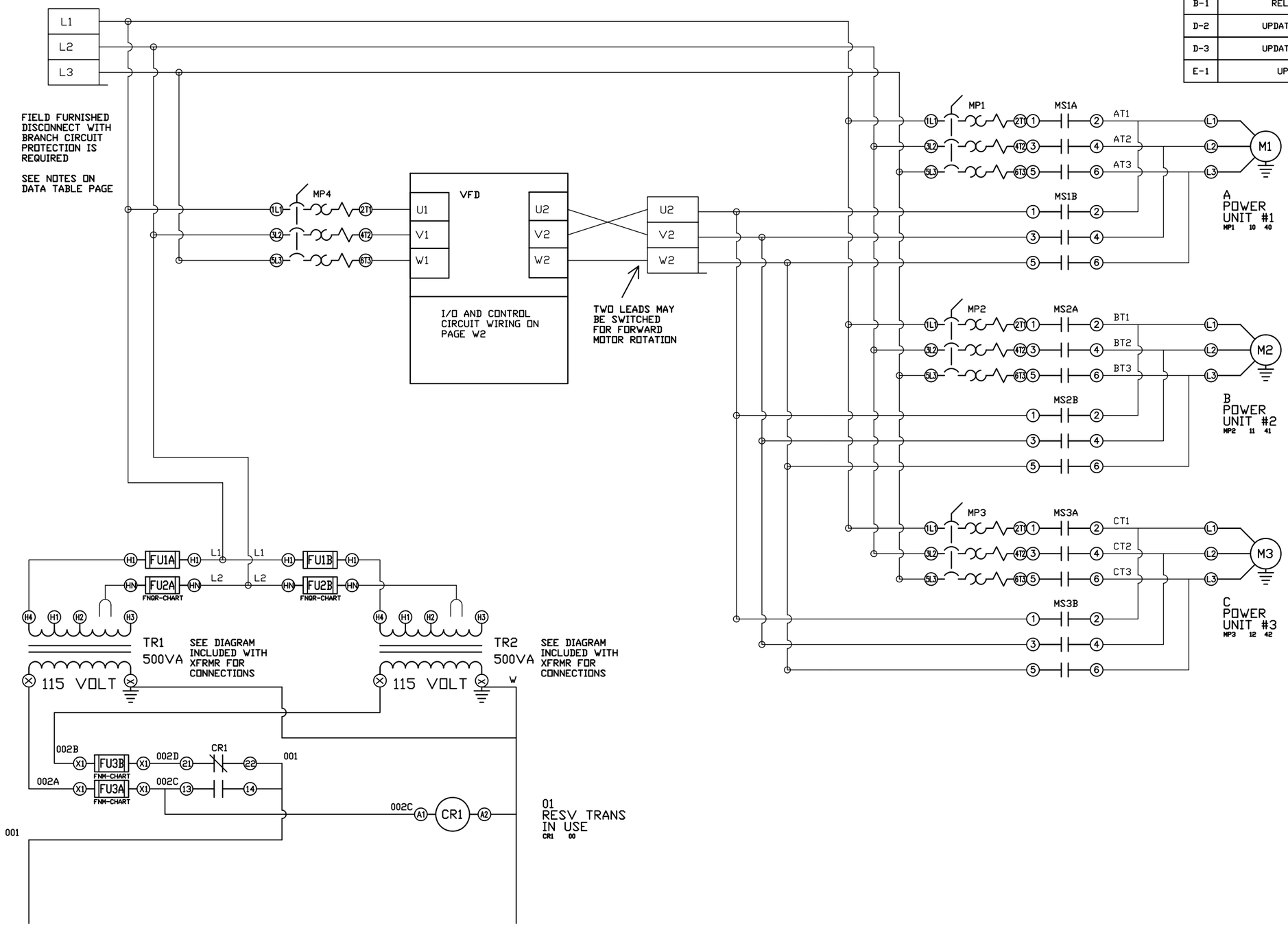

OPTIONAL:

BACNET, WEBSRVR,

POWEREX
PURE AIR TECHNOLOGY

CONFIDENTIAL DISCLOSURE:
This drawing is the property of the CAMPBELL GROUP of the SCOTT FETZER COMPANY and subject to return on demand. Its contents are confidential and must not be copied or submitted to outside parties for use or examination.

DRAWN BY	CHECKED BY	ENGINEERING APPROVAL
CHR	DMS	DMS
06/04/12	09/04/12	09/04/12

PANEL TYPE

TRI MED VACUUM
HMI, NFPA, VFD

DWG. TYPE WIRING

DWG. NO.

PXMI-V369V W

SHEET W-1

SIZE B

PXMI-V369V B1

REV	REVISION	DATE	ECN	NAME	CHKD
B-1	RELEASE TO PRODUCTION	09/04/12	22722	CHR	DMS
D-2	UPDATED DATA TABLE VALUES	9/10/13	PXEC_30	AJL	KMD
D-3	UPDATED DATA TABLE VALUES	11/19/13	PXEC_30	KMD	KMD
E-1	UPDATED BACNET CARD	07/20/15	PXEC0110	MJD	KMD

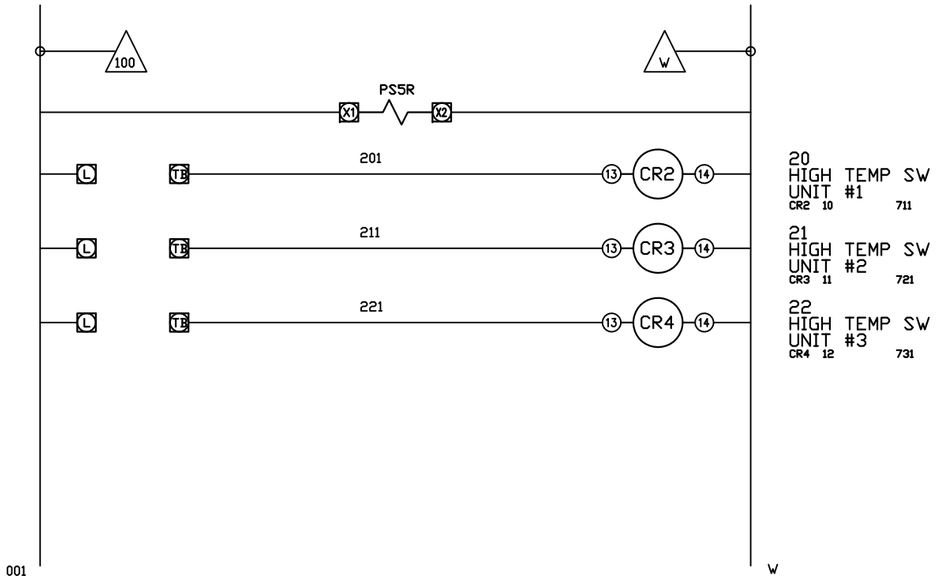

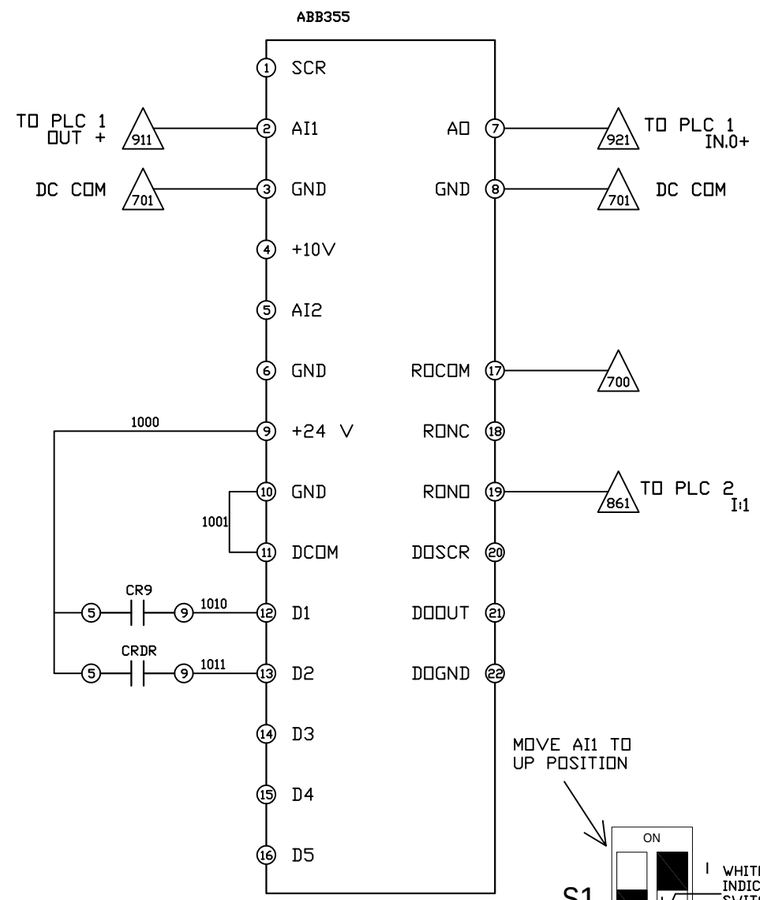

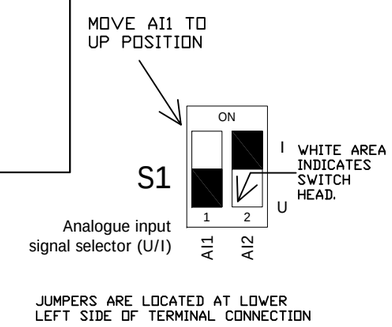

JUMPERS ARE LOCATED AT LOWER
LEFT SIDE OF TERMINAL CONNECTION

OPTIONAL:

BACNET, WEBSRVR,

POWEREX
PURE AIR TECHNOLOGY

CONFIDENTIAL DISCLOSURE:
This drawing is the property of the CAMPBELL GROUP of the SCOTT FETZER COMPANY and subject to return on demand. Its contents are confidential and must not be copied or submitted to outside parties for use or examination.

DRAWN BY	CHECKED BY	ENGINEERING APPROVAL
CHR	DMS	DMS
06/04/12	09/04/12	09/04/12

PANEL TYPE

TRI MED VACUUM
HMI, NFPA, VFD

DWG. TYPE WIRING

DWG. NO.

PXMI-V369V W

SHEET W-2

SIZE B

PXMI-V369V B1

REV	REVISION	DATE	ECN	NAME	CHKD
B-1	RELEASE TO PRODUCTION	09/04/12	22722	CHR	DMS
D-2	UPDATED DATA TABLE VALUES	9/10/13	PXEC_30	AJL	KMD
D-3	UPDATED DATA TABLE VALUES	11/19/13	PXEC_30	KMD	KMD
E-1	UPDATED BACNET CARD	07/20/15	PXEC0110	MJD	KMD

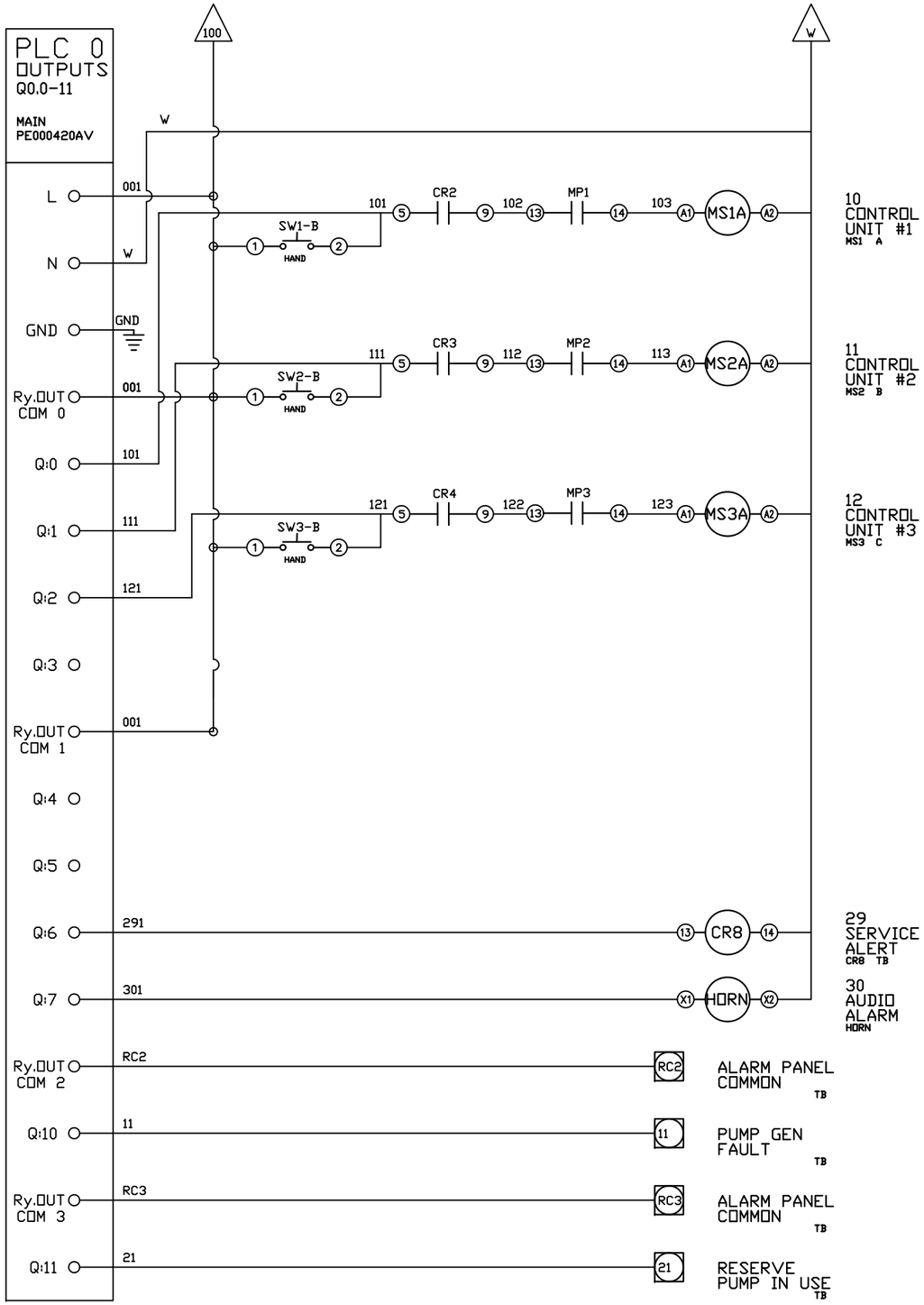

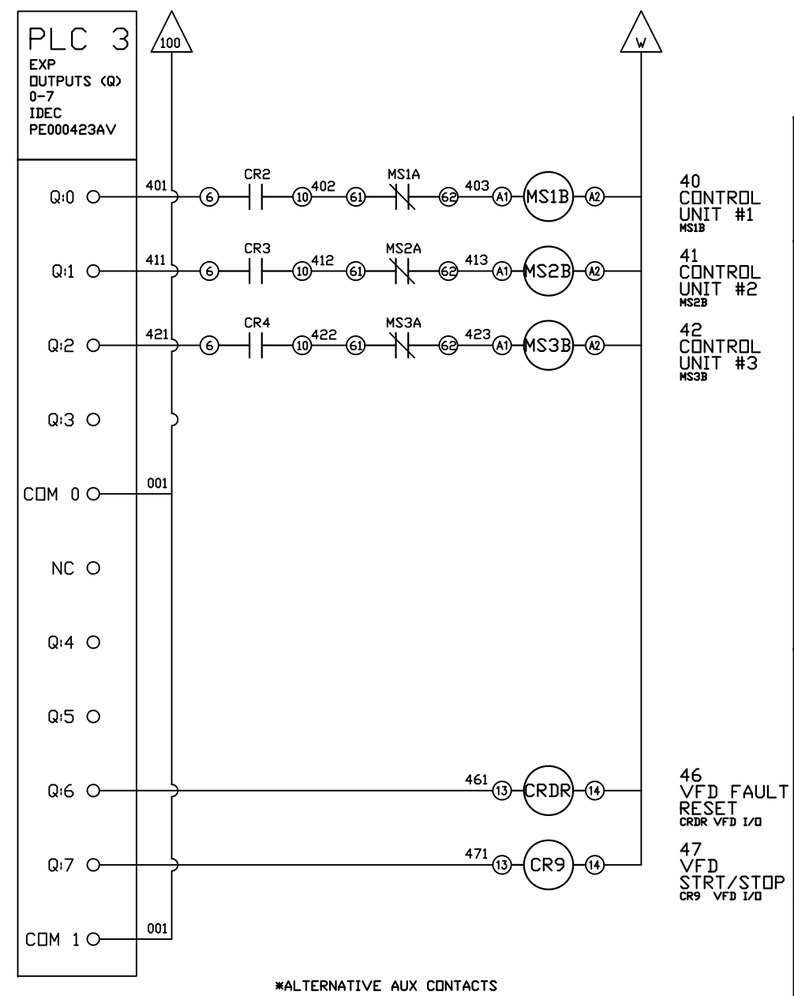

OPTIONAL:

BACNET, WEBSRVR,

POWEREX
PURE AIR TECHNOLOGY

CONFIDENTIAL DISCLOSURE:
This drawing is the property of the CAMPBELL GROUP of the SCOTT FETZER COMPANY and subject to return on demand. Its contents are confidential and must not be copied or submitted to outside parties for use or examination.

DRAWN BY	CHECKED BY	ENGINEERING APPROVAL
CHR	DMS	DMS
06/04/12	09/04/12	09/04/12

PANEL TYPE

TRI MED VACUUM
HMI, NFPA, VFD

DWG. TYPE WIRING

DWG. NO.

PXMI-V369V W

SHEET W-3

SIZE B

PXMI-V369V B1

REV	REVISION	DATE	ECN	NAME	CHKD
B-1	RELEASE TO PRODUCTION	09/04/12	22722	CHR	DMS
D-2	UPDATED DATA TABLE VALUES	9/10/13	PXEC_30	AJL	KMD
D-3	UPDATED DATA TABLE VALUES	11/19/13	PXEC_30	KMD	KMD
E-1	UPDATED BACNET CARD	07/20/15	PXEC0110	MJD	KMD

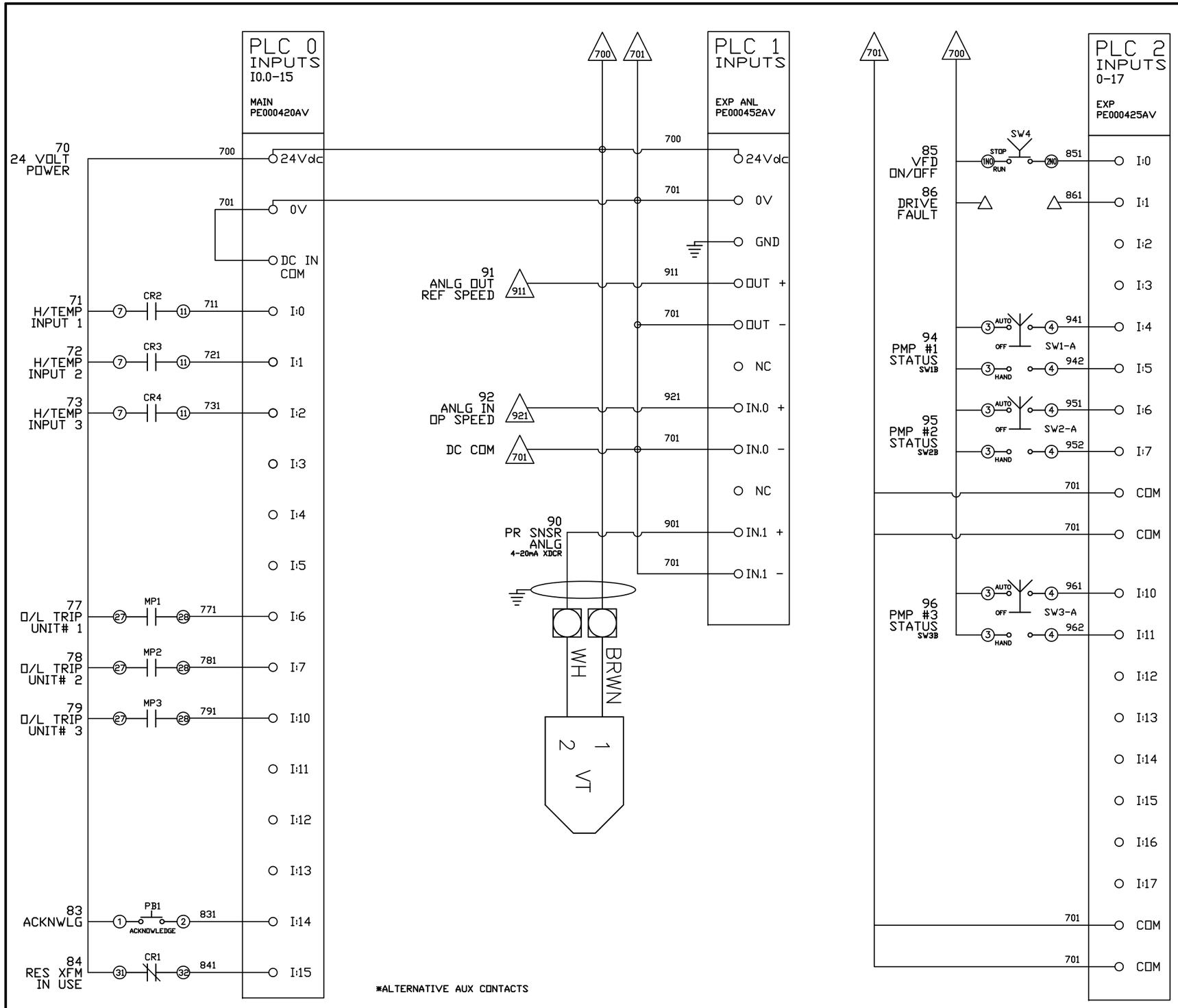

OPTIONAL:

BACNET, WEBSRVR,

POWEREX
PURE AIR TECHNOLOGY

CONFIDENTIAL DISCLOSURE:
This drawing is the property of the CAMPBELL GROUP of the SCOTT FETZER COMPANY and subject to return on demand. Its contents are confidential and must not be copied or submitted to outside parties for use or examination.

DRAWN BY	CHECKED BY	ENGINEERING APPROVAL
CHR	DMS	DMS
06/04/12	09/04/12	09/04/12

PANEL TYPE

TRI MED VACUUM
HMI, NFPA, VFD

DWG. TYPE WIRING

DWG. NO.

PXMI-V369V W

SHEET W-4

SIZE B

PXMI-V369V B1

REV	REVISION	DATE	ECN	NAME	CHKD
B-1	RELEASE TO PRODUCTION	09/04/12	22722	CHR	DMS
D-2	UPDATED DATA TABLE VALUES	9/10/13	PXEC_30	AJL	KMD
D-3	UPDATED DATA TABLE VALUES	11/19/13	PXEC_30	KMD	KMD
E-1	UPDATED BACNET CARD	07/20/15	PXEC0110	MJD	KMD

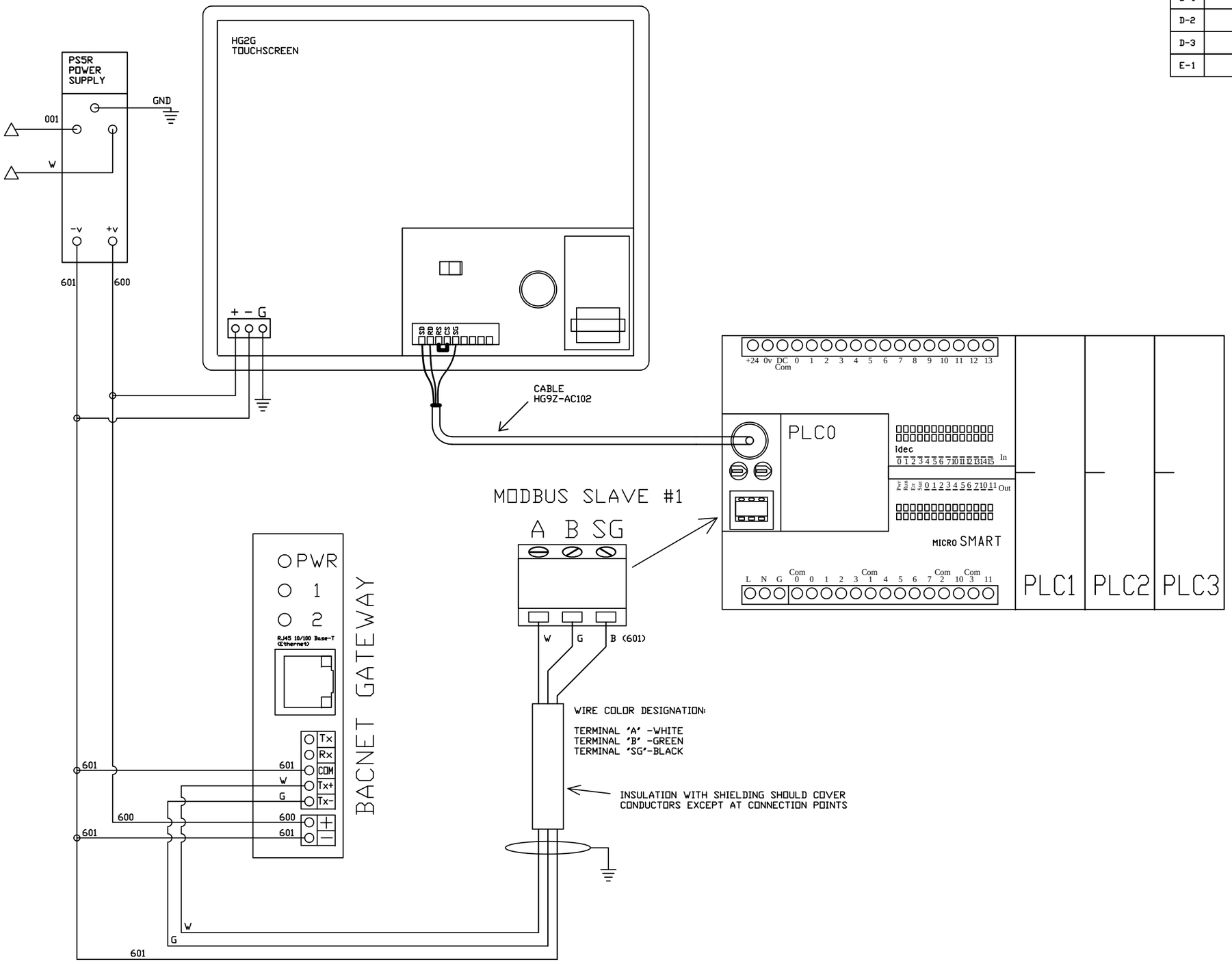

OPTIONAL:

BACNET, WEBSRVR,

POWEREX
PURE AIR TECHNOLOGY

CONFIDENTIAL DISCLOSURE:
This drawing is the property of the CAMPBELL GROUP of the SCOTT FETZER COMPANY and subject to return on demand. Its contents are confidential and must not be copied or submitted to outside parties for use or examination.

DRAWN BY	CHECKED BY	ENGINEERING APPROVAL
CHR	DMS	DMS
06/04/12	09/04/12	09/04/12

PANEL TYPE

TRI MED VACUUM
HMI, NFPA, VFD

DWG. TYPE WIRING

DWG. NO.

PXMI-V369V W

SHEET W-5

SIZE B

PXMI-V369V B1

REV	REVISION	DATE	ECN	NAME	CHKD
B-1	RELEASE TO PRODUCTION	09/04/12	22722	CHR	DMS
D-2	UPDATED DATA TABLE VALUES	9/10/13	PXEC_30	AJL	KMD
D-3	UPDATED DATA TABLE VALUES	11/19/13	PXEC_30	KMD	KMD
E-1	UPDATED BACNET CARD	07/20/15	PXEC0110	MJD	KMD

TERMINAL BLOCKS

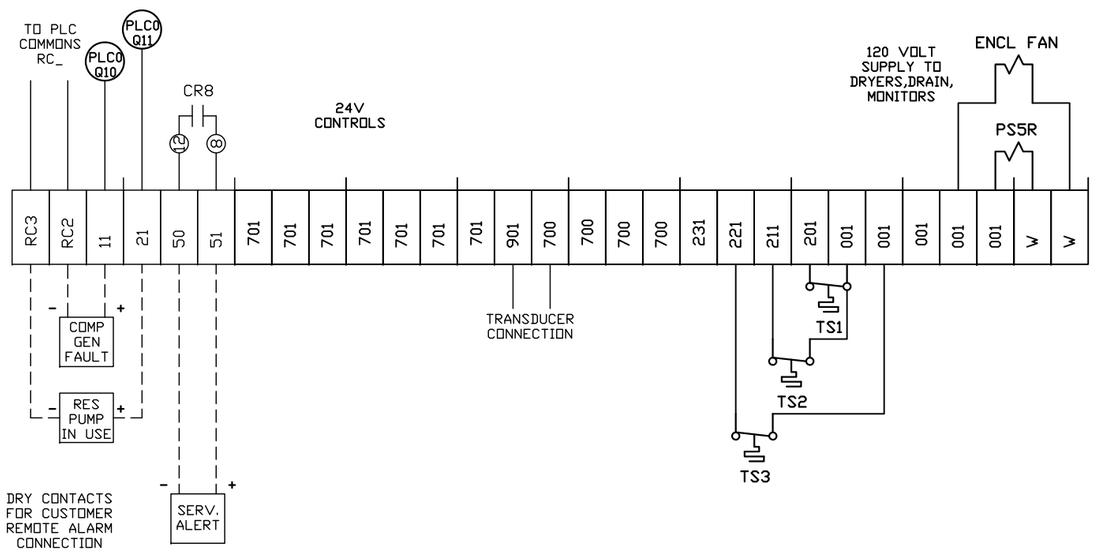

FIELD WIRING NOTES:

- PANEL GROUND MUST BE CONNECTED TO EARTH GROUND
- TRANSFORMER IS SIZED FOR LOADS SHOWN ON DRAWING ONLY.
- FIELD WIRING INDICATED BY ----------. WIRE TO BE COPPER RATED AT 75° C.
- ALL ALARM DRY CONTACTS ARE CLOSED FOR NORMAL OPERATION AND OPEN IN ALARM.
- DRY CONTACT RATING: 30V DC/2A (resistive load, inductive load L/R = 7 ms)
- USE CAT-5 CABLE W/RJ45 CONNECTOR FOR ETHERNET CONNECTION TO COMMUNICATION NETWORK OR BAS SYSTEM

OPTIONAL:

BACNET, WEBSRVR,

POWEREX
PURE AIR TECHNOLOGY

CONFIDENTIAL DISCLOSURE:
This drawing is the property of the CAMPBELL GROUP of the SCOTT FETZER COMPANY and subject to return on demand. Its contents are confidential and must not be copied or submitted to outside parties for use or examination.

DRAWN BY	CHECKED BY	ENGINEERING APPROVAL
CHR	DMS	DMS
06/04/12	09/04/12	09/04/12

PANEL TYPE

TRI MED VACUUM
HMI, NFPA, VFD

DWG. TYPE WIRING

DWG. NO.

PXMI-V369V W

SHEET W-6

SIZE B

PXMI-V369V B1

REV	REVISION	DATE	ECN	NAME	CHKD
B-1	RELEASE TO PRODUCTION	09/04/12	22722	CHR	DMS
D-2	UPDATED DATA TABLE VALUES	9/10/13	PXEC_30	AJL	KMD
D-3	UPDATED DATA TABLE VALUES	11/19/13	PXEC_30	KMD	KMD
E-1	UPDATED BACNET CARD	07/20/15	PXEC0110	MJD	KMD

TABLE 1-B DATA TABLE "B"

PANEL DATA 3ø – 50/60 Hz
500VA CONTROL CIRCUIT

(A) LOAD SPECIFICATIONS					(B) BRANCH CIRCUIT PROTECTION – PROVIDED BY INSTALLER		
PANEL PART NUMBER	MOTOR SIZE EACH (HP)	(A) POWER (V/PH)	(A) MOTOR LOAD EACH (FLA)	PANEL LOAD TOTAL (FLA)	NONTIME DELAY FUSE	TIME-DELAY FUSE	INVERSE-TIME CIRCUIT BREAKER
PXMIV36942CV	4.7	208V/3ø	12.6	41	65A	50A	60A
PXMIV36962CV	6.4	208V/3ø	12.6	41	65A	50A	60A
PXMIV36972CV	7	208V/3ø	19.	60	100A	75A	100A
PXMIV36992CV	9.1	208V/3ø	19.	60	100A	75A	100A
PXMIV369A2CV	10.2	208V/3ø	25.	77	150A	100A	125A
PXMIV369AA2CV	10	208V/3ø	26.4	81	150A	110A	125A
PXMIV369F2CV	15 *	208V/3ø	36.7	113	200A	150A	175A
PXMIV36943CV	4.7	230V/3ø	12.1	39	65A	50A	60A
PXMIV36963CV	6.4	230V/3ø	15	47	80A	60A	70A
PXMIV36973CV	7	230V/3ø	17.7	55	100A	70A	90A
PXMIV36993CV	9.1	230V/3ø	22.6	70	125A	90A	125A
PXMIV369A3CV	10.2	230V/3ø	25	77	150A	100A	125A
PXMIV369AA3CV	10	230V/3ø	23.8	73	125A	100A	110A
PXMIV369F3CV	15 *	230V/3ø	35	107	200A	150A	175A
PXMIV36944CV	4.7	460V/3ø	6.0	21	35A	25A	30A
PXMIV36964CV	6.4	460V/3ø	7.5	25	40A	35A	40A
PXMIV36974CV	7	460V/3ø	8.9	29	50A	40A	45A
PXMIV36994CV	9.1	460V/3ø	11.3	36	60A	45A	55A
PXMIV369A4CV	10.2	460V/3ø	12.5	40	70A	50A	60A
PXMIV369AA4CV	10	460V/3ø	11.9	38	65A	50A	60A
PXMIV369F4CV	15	460V/3ø	17.5	55	90A	70A	85A

NOTE– ADJUST OVERCURRENT PROTECTION DEVICE NOT TO EXCEED 115% OF MOTOR NAMEPLATE FLA VALUE

TABLE 1-R DATA TABLE "R"

PANEL DATA 3ø – 50/60 Hz
500VA CONTROL CIRCUIT

(A) LOAD SPECIFICATIONS					(B) BRANCH CIRCUIT PROTECTION – PROVIDED BY INSTALLER		
PANEL PART NUMBER	MOTOR SIZE EACH (HP)	(A) POWER (V/PH)	(A) MOTOR LOAD EACH (FLA)	PANEL LOAD TOTAL (FLA)	NONTIME DELAY FUSE	TIME-DELAY FUSE	INVERSE-TIME CIRCUIT BREAKER
PXMIV36952RV	5	208V/3ø	13	41	65A	50A	65A
PXMIV36972RV	7.5	208V/3ø	19	60	100A	75A	100A
PXMIV369A2RV	10	208V/3ø	25	78	150A	100A	125A
PXMIV369F2RV	15 *	208V/3ø	37.5	115	200A	150A	175A
PXMIV36952RV	5	208V/3ø	12	39	65A	50A	65A
PXMIV36973RV	7.5	230V/3ø	18	57	90A	70A	85A
PXMIV369A3RV	10	230V/3ø	23	72	125A	90A	125A
PXMIV369F3RV	15 *	230V/3ø	34	105	200A	150A	175A
PXMIV36954RV	5	208V/3ø	6	21	35A	25A	30A
PXMIV36974RV	7.5	460V/3ø	9	30	45A	35A	40A
PXMIV369A4RV	10	460V/3ø	11.5	38	60A	45A	55A
PXMIV469F4RV	15	460V/3ø	17	53	90A	70A	85A

NOTE– ADJUST OVERCURRENT PROTECTION DEVICE NOT TO EXCEED 115% OF MOTOR NAMEPLATE FLA VALUE

CONTROL TRANSFORMERS - 500VA					
FUSE TYPE		208 VOLT	230 VOLT	460 380 VOLT	575 VOLT
FU1,2A FU1,2B	FNQR	6A	5A	5A	4A
FU3A,B	FNM	7A	7A	7A	7A
SEE XFRMR FOR CONNECTIONS					

WIRE TYPE TABLE			
VOLTAGE	WIRE NUMBERS	GAUGE	COLOR
120VAC	001-599	16-18AWG	RED/BLK
0VAC	W	16-18AWG	WHT/BLK
24VDC	600-999	16-18AWG	PURPLE
0VDC	701	16-18AWG	PURPLE
GND	-	VARIES	GREEN
CUSTOMER SUPPLY	01-99	16-18AWG	YELLOW

OPTIONAL:

BACNET, WEBSRVR,

POWEREX
PURE AIR TECHNOLOGY

NOTES:

1. RECOMMENDED TIGHTENING TORQUES FOR WIRE TERMINALS:
   208-575 VOLT POWER 35 POUND INCHES
   120 VOLT POWER AND CONTROL VOLTAGE 15 POUND INCHES
2. PANEL GROUND MUST BE CONNECTED TO EARTH GROUND
3. INSTALLER TO PROVIDE MAIN DISCONNECTING DEVICE WITH SHORT CIRCUIT PROTECTION FOR THIS ELECTRICAL ASSEMBLY. SEE TABLE 1-B/R ON DATA TABLE PAGE FOR REQUIREMENTS.
4. ALL WIRES MUST BE LABELED ON BOTH ENDS
5. TRANSFORMER IS SIZED FOR LOADS SHOWN ON DRAWING ONLY. DO NOT CONNECT ANY OTHER DEVICES
6. △ -INDICATES A DRAWING WIRE CONNECTION TO ANOTHER PAGE.

Sequence of Operations

All Vacuum pumps will operate on a 10-minute minimum run timer (to prevent the short cycling of pumps) and will alternate Lead, Lag, and etc. every 60 minutes (upon completion of minimum run times).
The Lead pump will operate from the Variable Speed Drive and will trim the pump speed to maintain system set-point. If the Lead pump can not maintain set-point the Lag pumps will activate at full speed. When system set-point is achieved the Lead pumps will trim down and run at 30Hz for 10-minutes then shut off. Should all pumps in the system be running a "Reserve Pump in Use Alarm" will be activated.

System operation will be accessed via the Touch-Screen HMI on the panel door. The touch-screen will display alarms, pump hours, service requirements, and pump status. A set-up screen can be accessed for system set-points.

The optional PBMI (Powerex Building Management Integrator) gateway allows for system monitoring via standard web browser and has on-board BacNET IP for BAS communication.

CONFIDENTIAL DISCLOSURE:
This drawing is the property of the CAMPBELL GROUP of the SCOTT FETZER COMPANY and subject to return on demand. Its contents are confidential and must not be copied or submitted to outside parties for use or examination.

DRAWN BY	CHECKED BY	ENGINEERING APPROVAL
CHR	DMS	DMS
06/04/12	09/04/12	09/04/12

PANEL TYPE
TRI MED VACUUM
HMI, NFPA, VFD

DWG. TYPE DATA

DWG. NO.
PXMI-V369V W

SHEET D-1

SIZE B

PXMI-V369V B1