Please verify Serial Number prior to order. Filters and Accessories not included on all standard systems.

DEKKER VACUUM TECHNOLOGIES, INC.

VMX0203KA1
Maintenance Parts

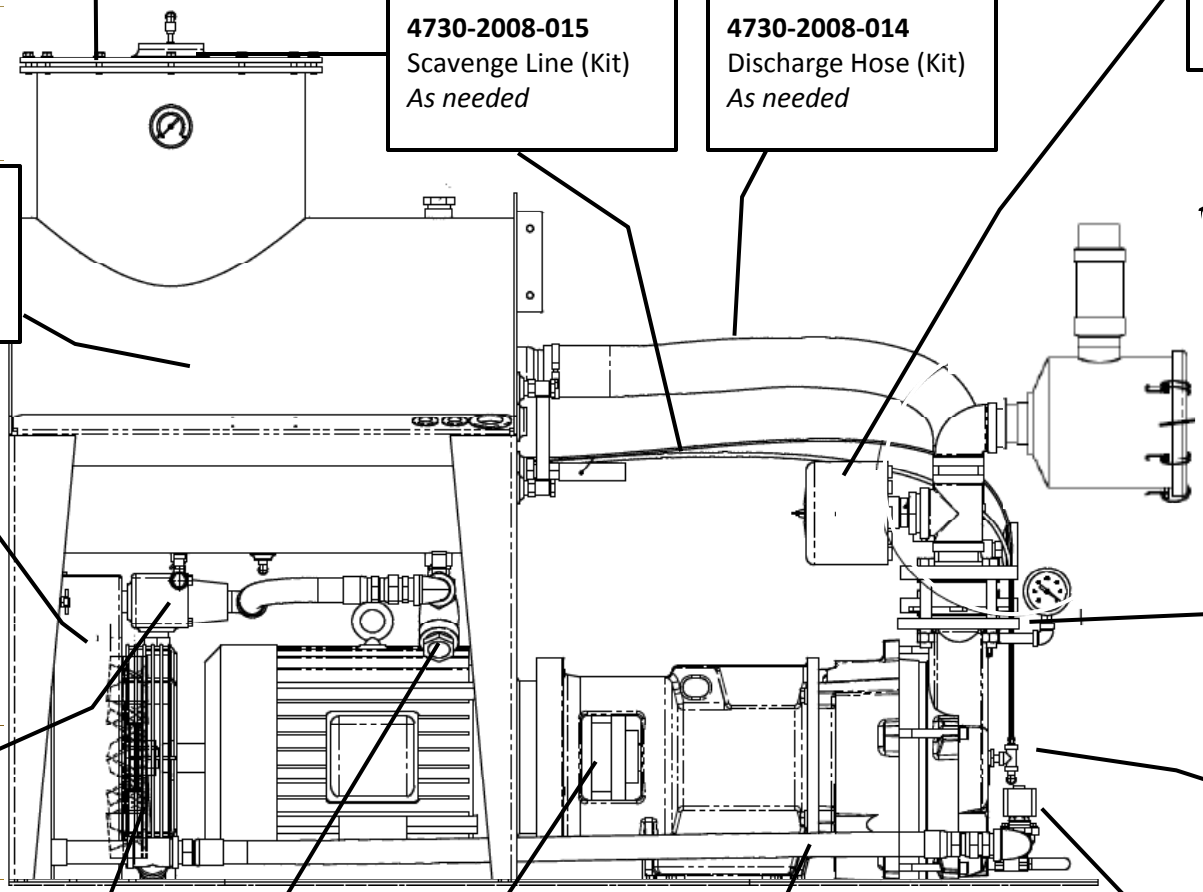

Separator Element
6300-1615-002
10k Hours

5220-0050-000
Standard Oil (11 Gal)
Yearly or 10k Hours

4005-2319-000
Heat Exchanger
As needed

(Optional)
7379-0100-XXX
Thermostat Valve
7372-XXXX-XXX
Temp Element
As needed

2710-1980-025
Fan Shroud
2800-1200-009
Fan
As needed

Y-Strainer
6770-0100-000
As needed

4730-2008-015
Scavenge Line (Kit)
As needed

2302-0800-000
Coupling Element
30k Hours
2321-0800-000
Coupling Assembly

4730-2008-014
Discharge Hose (Kit)
As needed

4730-2008-029
Seal Fluid Hose (Kit)
4730-2008-030(-034)
W/ Temp Control Valve
As needed

2924-0100-001
Replacement Element
Vacuum Relief Filter
1-3k Hours
7342-0125-000
Vacuum Relief Valve

2924-0290-001
Replacement Element
Inlet Filter
1-3k Hours

7321-0250-001
Check Valve
As needed
3510-0250-000
Flange Gasket
As needed

198017-100
Bearing
30k Hours
4700-2000-030
Seal Change Kit
30k Hours

7334-0075-XXX
Solenoid Valve
As needed