Pedestal bare-shaft vacuum pump DV0100B-PA

Introducing the TITAN series high efficiency, single-stage liquid ring vacuum pump.

Why should you consider this vacuum pump for your application?

- Designed for heavy duty applications.
- 316 stainless steel impeller is standard.
- Sturdy bearing pedestal.
- Standard with roller bearing for V-belt drive applications.
- Manufactured to ISO 9001 standards.
- Low operating noise level.
- Heavy duty bearings mounted external to the pumping chamber.
- Features single face mechanical seal as standard.
- Virtually no maintenance is required.
- Pumps are available in different materials to suit your application.
- Capable of handling saturated gas mixtures.
- Capable of handling small amounts of liquids.
- Only one moving part.
- Can operate using various seal-fluids.

Performance characteristics

Nominal capacity: 100CFM
Motor: 60Hz/7.5HP/5.5kW
50Hz/5.5HP/4kW
Speed(RPM): 60Hz/1750
50Hz/1450
Max.vacuum: 29"Hg/25Torr
Weight (excluding motor): 167Lbs/76kg
Max. gas inlet temp: 212°F/100°C
Max.noise level(at 3ft):74 dBA
Performance based on dry air, seal-water temperature 60°F and atmospheric pressure of 29.92"Hg.

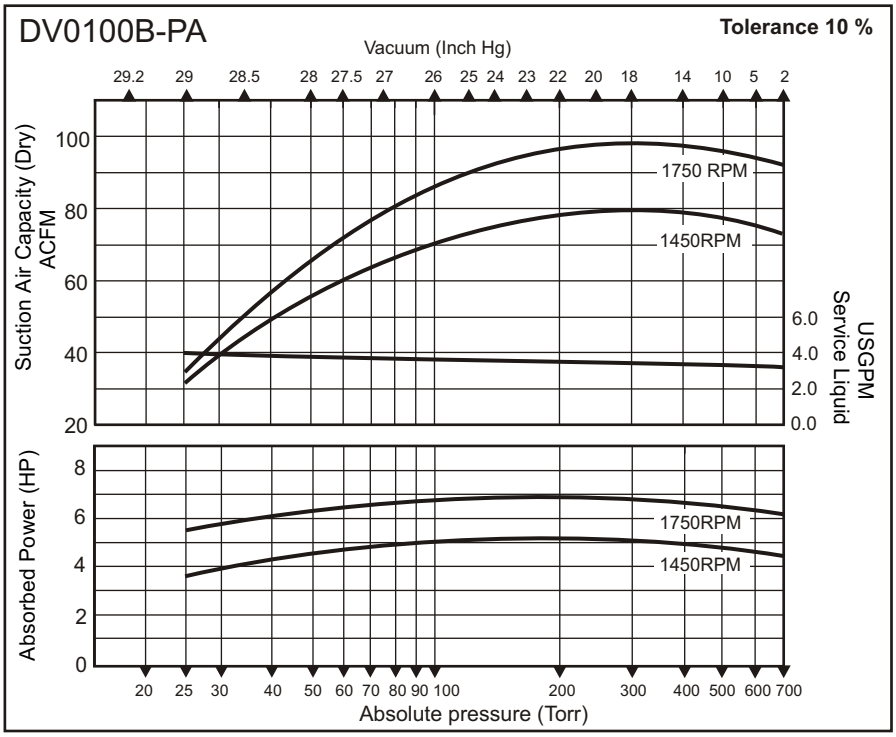

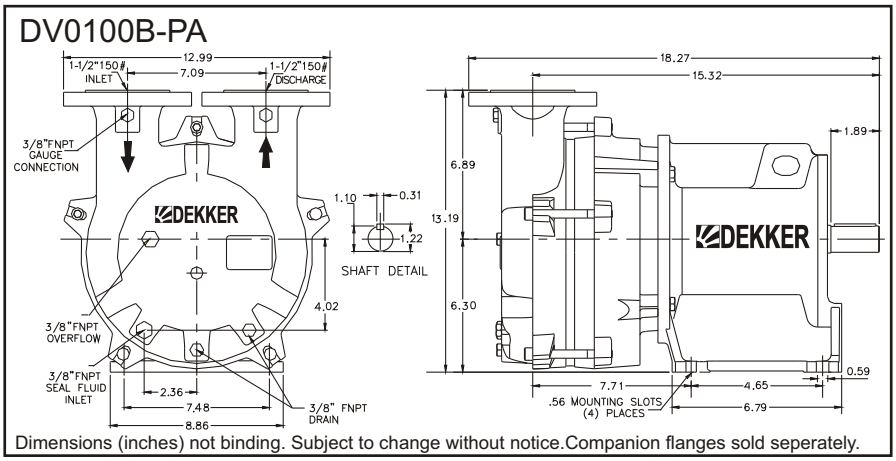

Dimensions (inches) not binding. Subject to change without notice.Companion flanges sold seperately.

Materials of construction/Seal code

Mat.code	1	2	3	4
Casing	NA	NA	cast iron	316 SS
Portplate	NA	NA	cast iron	316 SS
Impeller	NA	NA	316 SS	316 SS
Shaft	NA	NA	420 SS	316 SS
Seal code	NA	NA	A*	B*

A= standard mechanical seal with Viton elastomer
B= standard mechanical seal with Teflon elastomer
* = other seal materials available upon request.