DV0450D-KA3-230-460V			
ITEM NO.	QTY.	DESCRIPTION	PART NUMBER
1	1	BASEPLATE CS	0300-1980-003
2	1	DRIVE CPLG ASSY 9S 42MM/1.88" CI/EP	2321-0900-000
3	1	GUARD CPLG FOR 25-50HP CS	3700-1980-002
4	1	BOLT SET FOR 284T FRAME MOTOR	3775-0284-000
5	1	MOTOR 25HP 4P 230/460V 284T PREM	5013-0250-101
6	2	RISERBLOCK FOR 284/286T MOTOR CS.	6050-1980-251
7	4	RISERBLK SHIM FOR 284/286T MOTOR CS	6050-1980-303
8	1	PUMP LR 1 STG 450 CFM CI/316SS/VITON	DV0450D-KA3

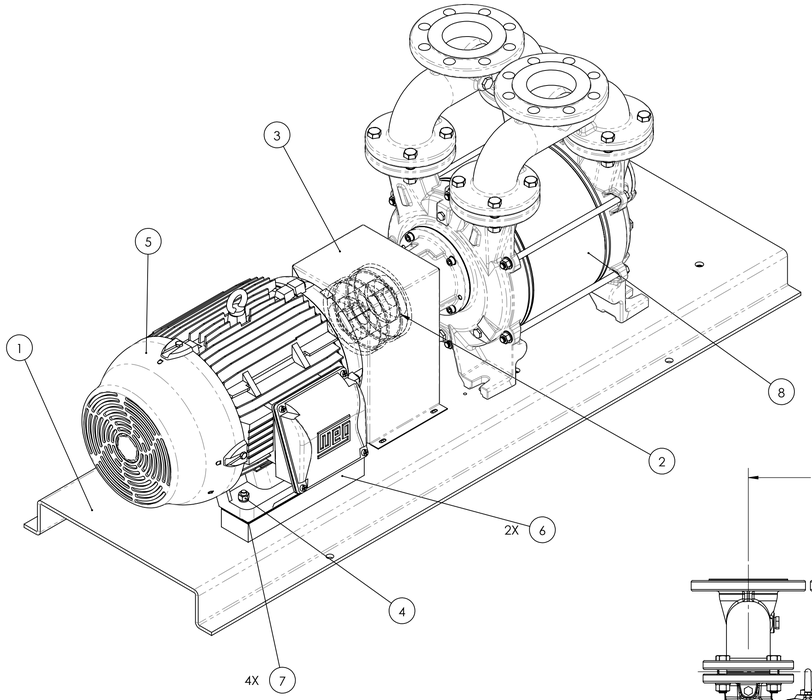

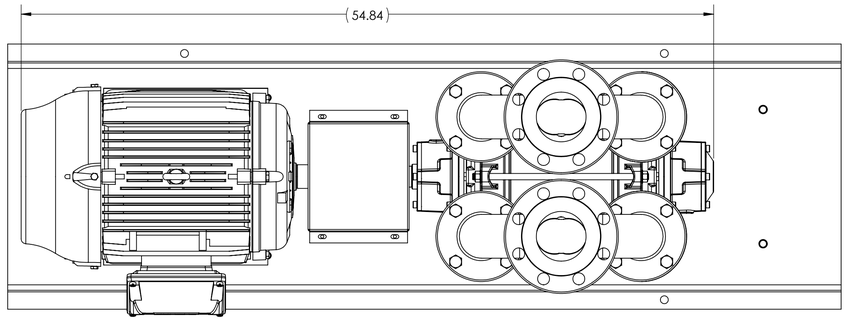

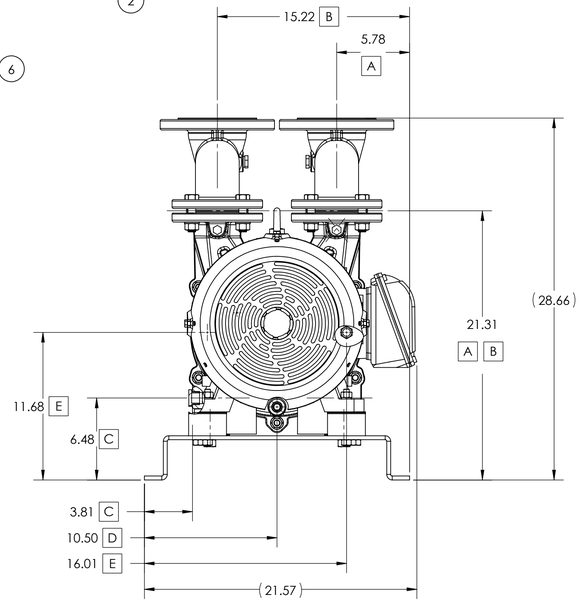

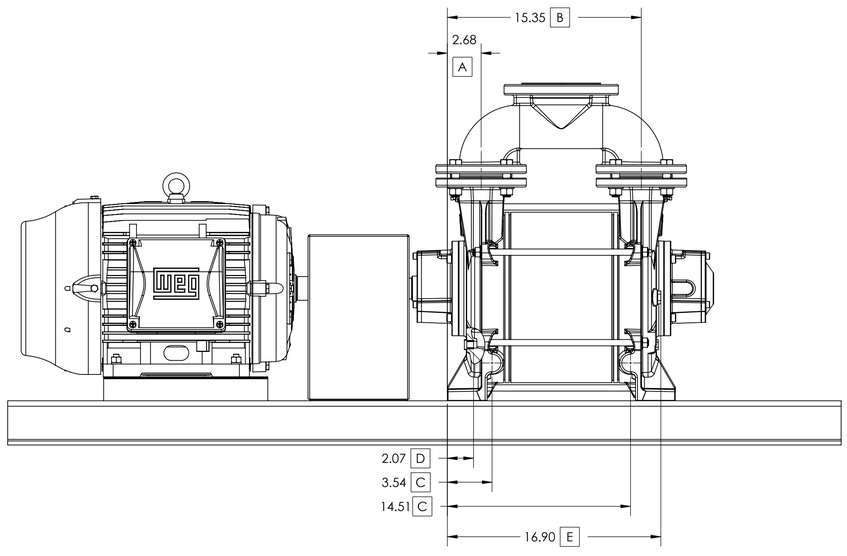

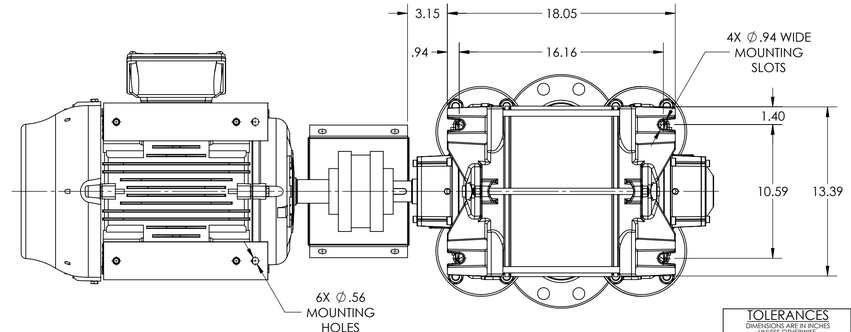

NOZZLE SCHEDULE		
IDENTIFIER	CONNECTION	SIZE
A	VAPOR INLET	4" 150# RF FLANGED
B	VAPOR DISCHARGE	4" 150# RF FLANGED
C	2X SEAL FLUID INLET	3/4" FNPT
D	DRAIN	3/8" FNPT
E	OVERFLOW CONNECTIONS	1/2" FNPT

REVISIONS					
REV.	DESCRIPTION	DATE	DWG	ERP	APP

TOLERANCES
DIMENSIONS ARE IN INCHES UNLESS OTHERWISE SPECIFIED IN DRAWING
DECIMAL ± .01"
FRACTIONAL ± 1/2"
ANGULAR ± .5°

THIRD ANGLE PROJECTION

THIS PRINT IS PROPERTY OF DEKKER VACUUM TECHNOLOGIES, INC., AND MAY NOT BE GIVEN TO ANY OTHER CONCERN WITHOUT THE CONSENT OF DEKKER VACUUM TECHNOLOGIES, INC.

MODEL NO.	DV0450D-KA3
PART NO.	DV0450D-KA3-230-460V
DESIGN BY: RS	DATE: 7/22/2022
DRAWING BY: RS	DATE: 7/22/2022
CHECKED BY: CB	DATE: 8/1/2022
APPROVED BY:	DATE:
REVIEWED BY:	DATE:

DEKKER VACUUM TECHNOLOGIES, INC.

DESCRIPTION: DV0450D-KA3 W/ 230/460V MOTOR ON BASE

DRAWING TYPE: PRODUCTION	DWG NO.: 2022503	SHEET SIZE: D
WEIGHT: 1063.77 LB	SCALE: 1:6	SHEET NO.: 1 OF 1