TRMX 40x series

Close-coupled motor mounted vari-ported single stage liquid ring vacuum pumps

TRAVAINI PUMPS® USA
Engineered Pump Solutions

200 Newsome Drive
Yorktown, VA 23693
800-535-4243
www.Travaini.com

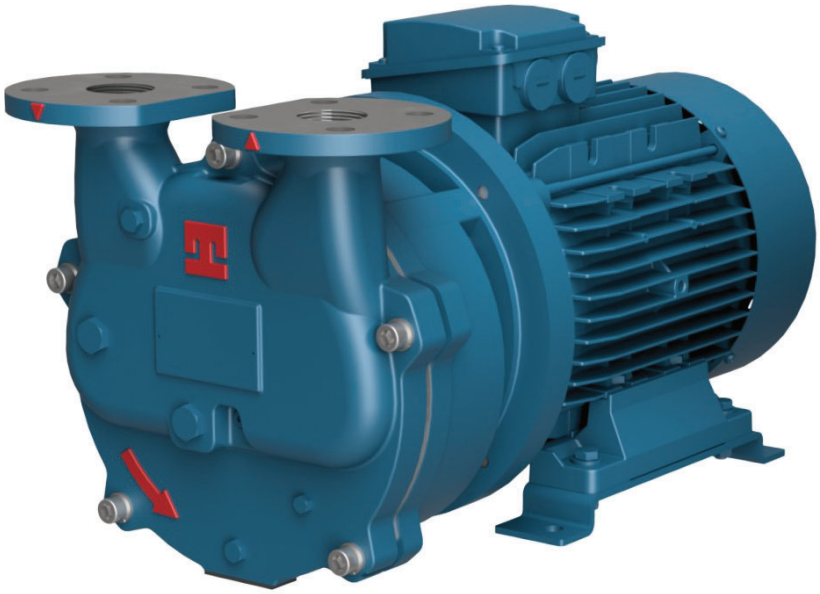

Pressure Range	25 to 760 TORR
Capacity	30 to 155 CFM
Features	Single stage Vari-ported vacuum pump mounted on motor shaft.
Shaft sealing options	Mechanical seal
Options	Anticavitation valve
Accessories	Available as a component in a vacuum system

Technical Data

PUMP TYPE		TRMX 403	TRMX 405	TRMX 407
Speed	RPM	1750	1750	1750
Motor - installed power	HP	5.5	7.5	10
Avg. service liquid flow	GPM	4	5	5
Noise level at 150 Torr	dB(A)	69	70	74
Min. suction pressure	Torr	25	25	25

*Standard Materials of Construction***

VDMA	Description	F	RX	A3
101	**Pump casing**	Cast Iron		
168	**Impeller housing**			
137	**Port plate**	AISI–304 Stainless Steel		
210	**Shaft**	AISI–316 Stainless Steel		
230	**Impeller**	Ductile Iron	AISI–304 Stainless Steel	

Model Designation

Example: TRMX 403/1-C/A3

T	**T**ravaini
R	Liquid **R**ing Pump
V	**M**otor mounted
X	Design revision
40x	**40** is the Flange size (mm) 40**3**-40**5**-40**7** designate three different levels of pump capacity (see table here above)
C	**C** = Mechanical seal
A3	Materials of construction (see table here to the left)

** Special materials available upon request
- Request for information on how this pump is assembled into our WATERSEAL and DYNASEAL engineered vacuum systems.
- For further information please consult customer service @travaini.com

DIAGRAMMA DI FUNZIONAMENTO
Performance curves
POMPA PER VUOTO AD ANELLO DI LIQUIDO
Liquid ring vacuum pump
TIPO *Type* **TRMX/TRVX 403**

pompetravaini

I DATI RIPORTATI SONO RIFERITI A :
Data refers to :

ARIA SECCA A 20 °C	———	*Dry air at 20 °C (68 °F)*
ARIA SATURA A 20 °C	- - - - - -	*Saturated air at 20 °C (68 °F)*
LIQUIDO DI ESERCIZIO	ACQUA – *Water*	*Service liquid*
TEMPERATURA LIQUIDO DI ESERCIZIO	15 °C – *(59 °F)*	*Service liquid temperature*
PRESSIONE DI SCARICO	1013 mbar	*Discharge pressure*
TOLLERANZE	10%	*Tolerance*

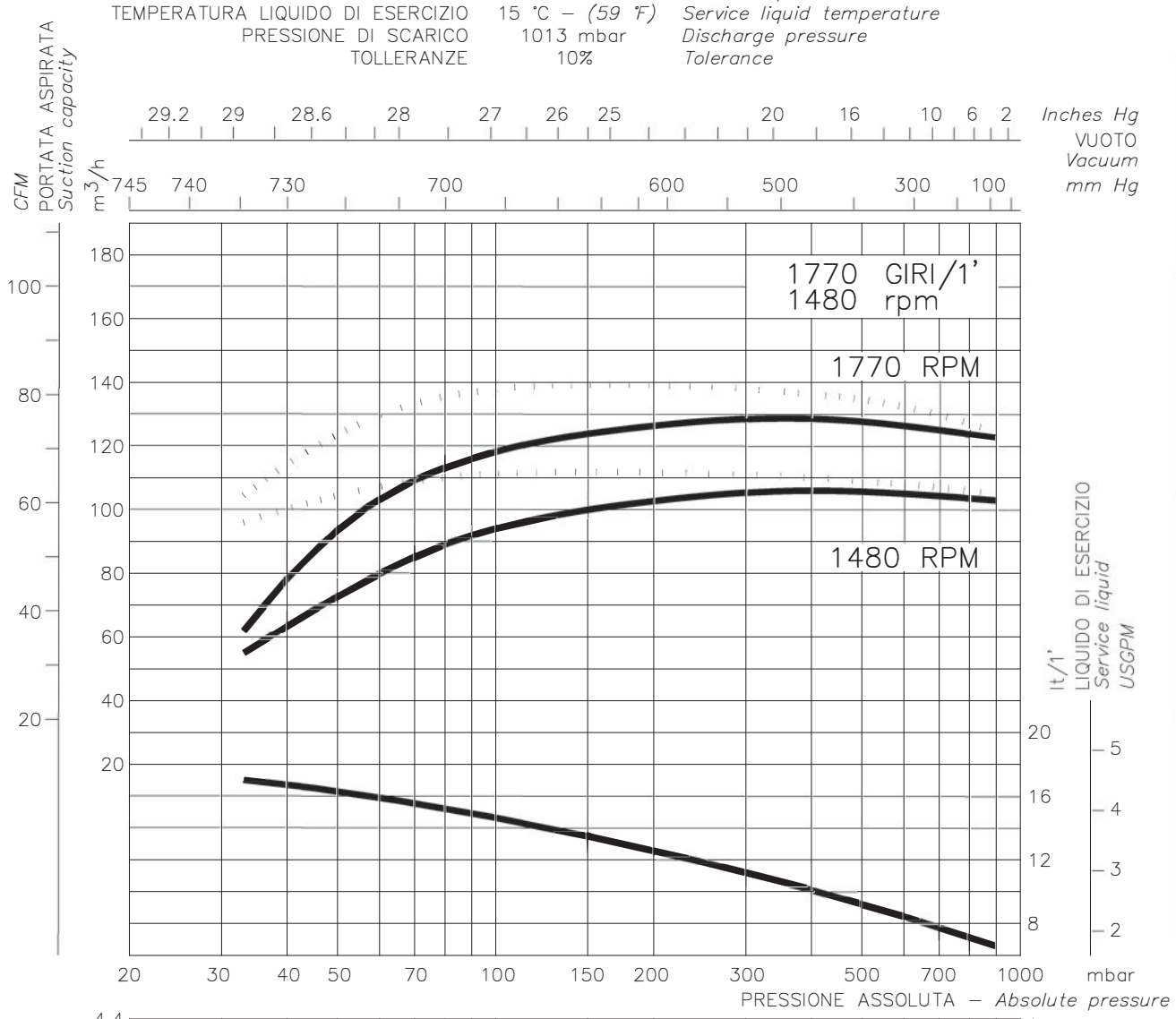

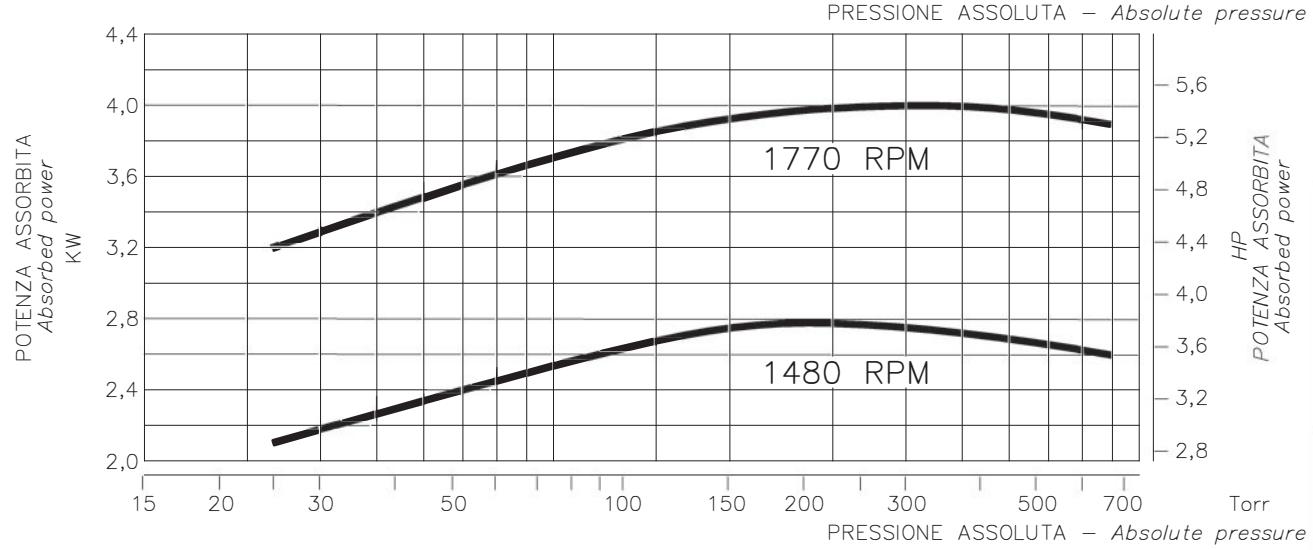

RIF.–*Ref.:* A.C./C.T.	DATA–*Date:* 02–2024	SOST.–*Repl.:* 7513.150.R04.01	N°.: 7513.150.R12.01

DIMENSIONI D'INGOMBRO / *Overall dimensions*
POMPA PER VUOTO AD ANELLO DI LIQUIDO
Liquid ring vacuum pumps
SERIE / *Series*

TRMX serie 400 /1-C

pompetravaini

Versione **MONOBLOCCO DIRETTO**
Rotazione oraria

MONOBLOCK FOR DIRECT COUPLING *construction*
Clockwise rotation

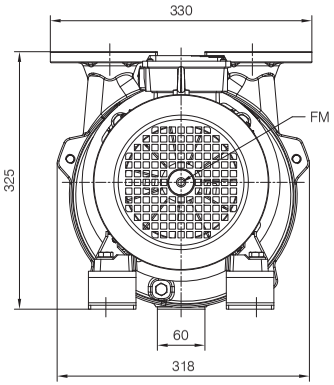

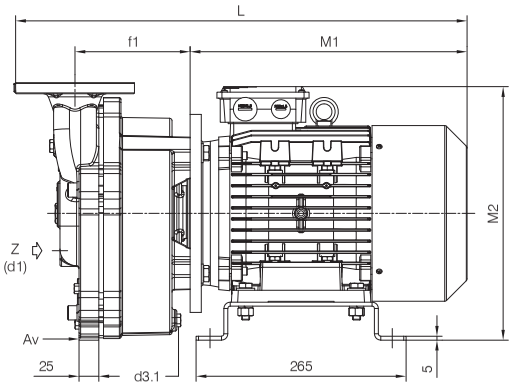

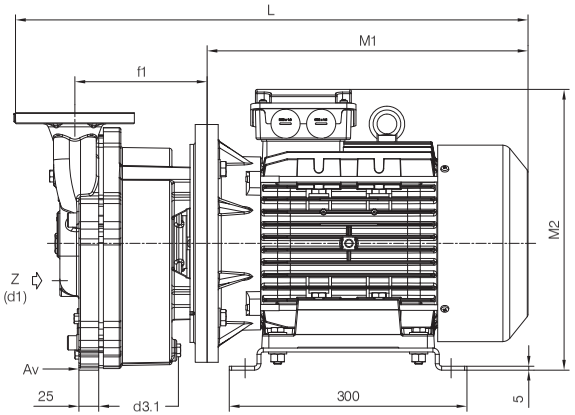

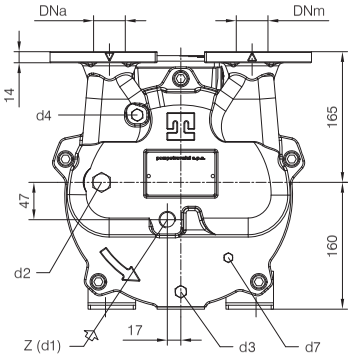

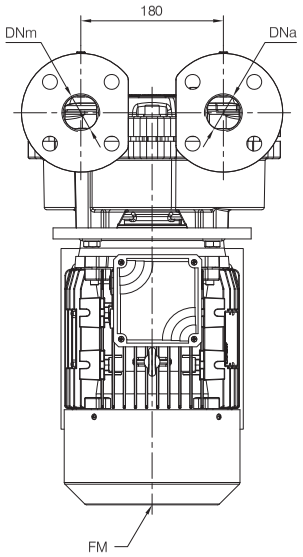

Costruzione con Motore / *Construction with Motor*
kW 3.0 IEC 100 L - kW 4.0 IEC 112 M

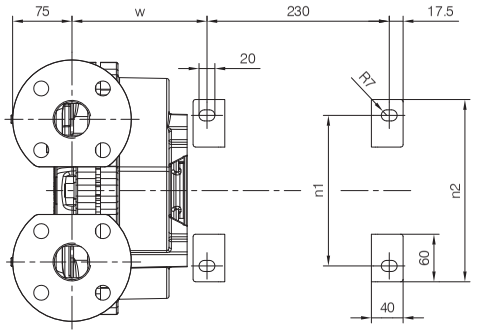

Costruzione con Motore / *Construction with Motor*
kW 5.5 IEC 132 S - kW 7.5 IEC 132 M

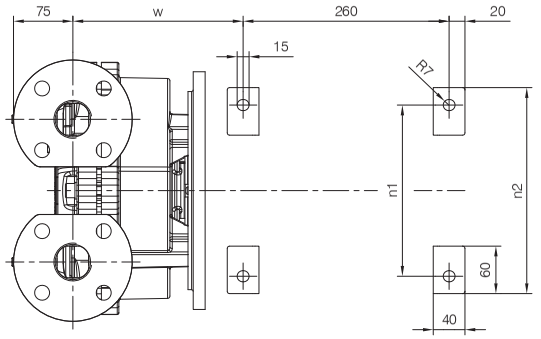

d1 Connessione filettata G 1/2 - per ingresso alimentazione
G 1/2 threaded connection - for liquid supply inlet

d2 Attacco tappato G 1/2 - connessione ausiliaria
G 1/2 plugged connection - auxiliary connection

d3 Attacco tappato G 1/4 - per scarico corpo pompa
G 1/4 plugged connection - for pump casing drain

d3.1 Attacco tappato G 1/4 - per scarico ausiliario corpo pompa
G 1/4 plugged connection - for pump casing auxiliary drain

d4 Attacco tappato G 1/4 - per manovuotometro
G 1/4 plugged connection - for manovacuum gauge

d7 Attacco tappato G 1/8 - per valvola anticavitazione
G 1/8 plugged connection - for anticavitation valve

Nota / *Note* :

Lt Quantità di acqua all'asse dell'albero in litri
Water quantity at shaft axis in liters

Mi Momento di Inerzia Max all'avviamento
Max Moment of Inertia at start-up

Av Spessore antivibrante
Anti vibration pad

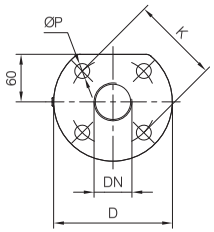

FLANGE FILETTATE SPECIALI / *SPECIAL THREADED FLANGES*
Filettatura secondo UNI EN ISO 228-1
Dimensioni foratura secondo EN 1092 - PN10
Threaded according to UNI EN ISO 228-1
Drilling dimensions according to EN 1092 - PN10

Dimensioni flange *Flanges dimensions*				
DNa-DNm	D	K	P	N° fori *holes*
DN 40 G 1 1/2	150	110	19	4

FM Foro filettato M10 - per controllo manuale rotazione albero motore tramite utensile
M10 threaded hole - for manual control motor shaft rotation with tool

M1-M2 Dimensioni in funzione della marca e/o del modello del motore installato
Dimensions according to installed motor brand and/or model

POMPA TIPO *Pump type*	Dimensioni costruttive *Construction dimensions*												
	DNa - DNm	Mi *kgm²*	Lt	Hz	kW	L	f1	w	n1	n2	M1	M2	Peso *Weight*
TRMX 403	DN 40 G 1 1/2	0.04	1.9	50	3.0	503	122	140.5	160	200	306	304	61
				60	4.0	547	122	147.5	190	230	350	320	69
TRMX 405	DN 40 G 1 1/2	0.05	2.5	50	4.0	570	145	170.5	190	230	350	320	72
				60	5.5	647	167	215	216	260	405	355	94
TRMX 407	DN 40 G 1 1/2	0.08	3.3	50	5.5	662	182	230.5	216	260	405	355	96
				60	7.5	662	182	230.5	216	260	405	355	100

MOTORI ELETTRICI *Electric Motors*		
Grandezza *Frame size* IEC B35	Giri/min. *RPM* 1450 - 50 Hz	
	kW	HP
100 L	3.0	4.0
112 M	4.0	5.5
132 S	5.5	7.5
132 M	7.5	10.0
Grandezza *Frame size* IEC B35	Giri/min. *RPM* 1760 - 60 Hz	
	kW	HP
112 M	4.0	5.5
132 S	5.5	7.5
132 M	7.5	10.0

Sicurezza del macchinario secondo UNI EN ISO 13857. Connessioni filettate secondo UNI EN ISO 228-1.
Disegno schematico. Dimensioni in mm con tolleranze secondo **EN 735**-1995. Pesi indicativi in kg, riferiti a pompe in ghisa, non impegnativi.
Safety of machinery according to UNI EN ISO 13857. Threaded connection according to UNI EN ISO 228-1.
*Schematic drawing. Dimensions in mm with tolerances according to **EN 735**-1995 standards. Weights in kgs, referred to pumps in cast iron, not binding.*

RIF.–*Ref.:* E.C./C.T.	DOCUMENTO N. – *Document no.:* 751X.1L7.2005	ITEM n° D0509R
DATA –*Date:* 02–2024	SOSTITUISCE DOC. – *Replaces Doc.* (ITEM): D0505R	